0274 SERIES

2.54x2.54mm(0.1"x0.1"), Board Spacer, Dual Row, S.M.D.

Specifications
Current Rating: 3 Amp
Insulation Resistance: 500 MΩ Min.
Dielectric Withstanding: 600 VAC
Contact Resistance: 20 mΩ Max.
Operating Temperature:−40°C to +105°C

Materials
Contact Material: Copper Alloy
Contact Plating: Gold/Tin over Nickel
Insulator: Glass Filled Polyester

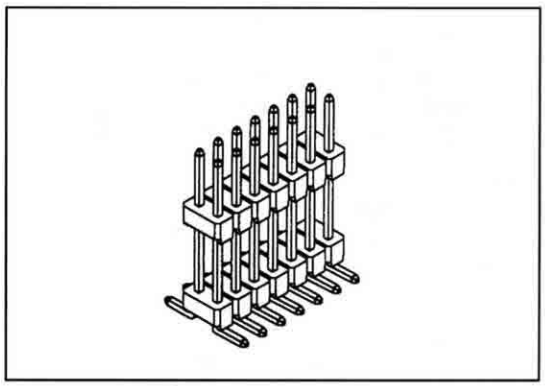

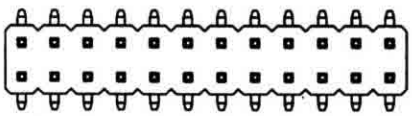

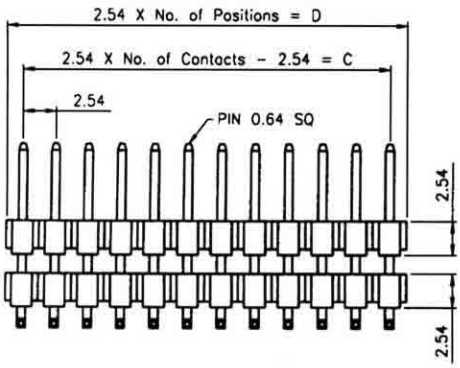

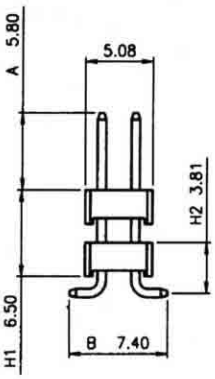

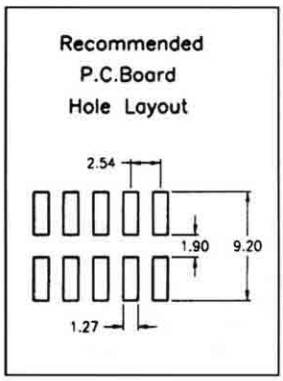

No. of Pins/Row	Dimension Information C	D	No. of Pins/Row	Dimension Information C	D	No. of Pins/Row	Dimension Information C	D	No. of Pins/Row	Dimension Information C	D
02	2.54	5.08	13	30.48	33.02	24	58.42	60.96	35	86.36	88.90
03	5.08	7.62	14	33.02	35.56	25	60.96	63.50	36	88.90	91.44
04	7.62	10.16	15	35.56	38.10	26	63.50	66.04	37	91.44	93.98
05	10.16	12.70	16	38.10	40.64	27	66.04	68.58	38	93.98	96.52
06	12.70	15.24	17	40.64	43.18	28	68.58	71.12	39	96.52	99.06
07	15.24	17.78	18	43.18	45.72	29	71.12	73.66	40	99.06	101.60
08	17.78	20.32	19	45.72	48.26	30	73.66	76.20			
09	20.32	22.86	20	48.26	50.80	31	76.20	78.74			
10	22.86	25.40	21	50.80	53.34	32	78.74	81.28			
11	25.40	27.94	22	53.34	55.88	33	81.28	83.82			
12	27.94	30.48	23	55.88	58.42	34	83.82	86.36			

Ordering Information

0274 - 2 X X - X X 0

2: Gold — 00:A/H1/H2/B=5.8/6.5/3.81/7.4mm — Position